AZUM002

HEAT NO.	NO.	ITEM	MATERIAL	SIZE 1	SIZE 2	THICKNESS 1	THICKNESS 2	TYPE	Q'TY (MM,EA)	WEIGHT (KG) UNIT(M,EA)	WEIGHT (KG) TOTAL	REMARK
	1	PIPE-SMLS	API 5L-B PSL.1	8"		S/20			6000	33.3	199.8	-
	2	PIPE-SMLS	API 5L-B PSL.1	8"		S/20			312	33.3	10.4	-
	3	PIPE-SMLS	API 5L-B PSL.1	8"		S/20			290	33.3	9.7	-
	4	90D LR ELBOW	A234-WPB	8"		S/20		BW	1	15.9	15.9	-
	5	PAD PLATE(1-Ø6)	A36	236	220	PL6			1	2.4	2.4	00GMA65BR002_UAY00Y-A1-BQ001ST
	6	PAD PLATE(1-Ø6)	A36	236	220	PL6			1	2.4	2.4	00GMA65BR002_UAY00Y-A1-BQ002ST
										TOTAL W.T (KG)	240.6	END TO END (MM) 6644

PREHEAT CHECK(Min. °C)

Dimensional & Visual Inspection

☐ Accept ☐ Reject

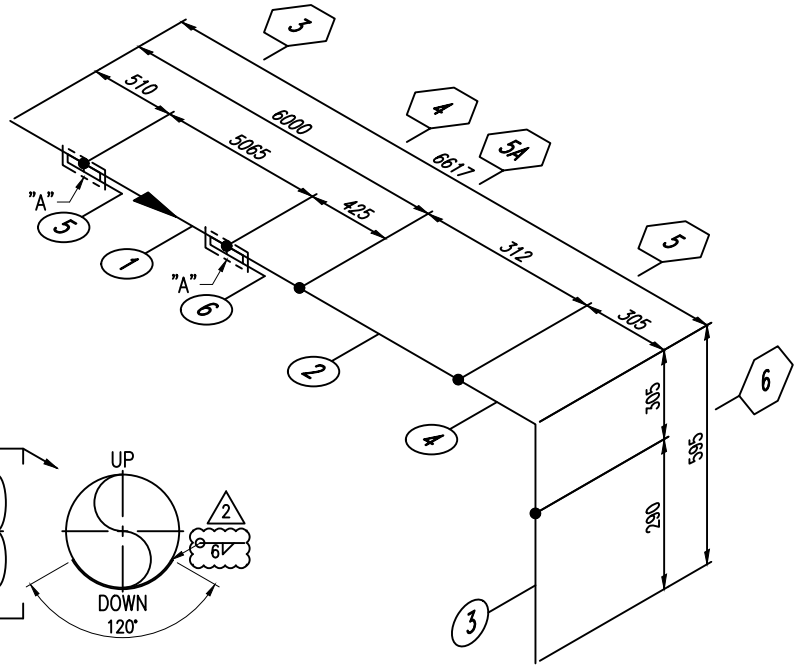

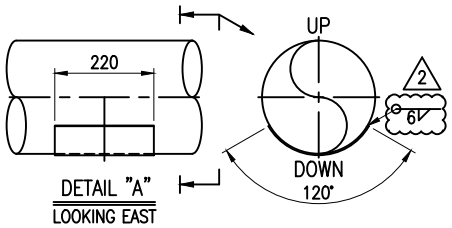

DETAIL "A"
LOOKING EAST

NOTES
1. SEE FABRICATION STANDARD DOCUMENT NO.AZU-FAB-STD-001 FOR SPOOL FABRICATION.
2. ALL DIMENSIONS ARE IN MILLIMETERS UNLESS OTHERWISE SPECIFIED.
3. ALL BUTTWELDINGS AND O-LET WELDINGS ARE FULL PENETRATION WELD.
4. FFW=FIELD FITTED WELD
5. ⊕ : ORIENTATION OF LONGITUDINAL WELD SEAM FOR WELDED PIPE

REV.	DATE	DESCRIPTION	PREPARED	CHECKED	REVIEWED	APPROVED
2	2025.01.13	REVISED AS PER MARKED	J.G.LIM	J.S.KIM	G.J.KANG	G.H.CHO
1	2024.12.24	REVISED AS PER MARKED	J.G.LIM	J.S.KIM	G.J.KANG	G.H.CHO
0	2024.12.10	FIRST ISSUE	J.G.LIM	J.S.KIM	G.J.KANG	G.H.CHO

APPLICABLE CODE		ASME B31.1(2022)	CODE JURISDICTION	NBEP
DESIGN	PRESS.	5 bar (g)	INSULATION(Y/N)	N
	TEMP.	60 °C	END BEVEL TYPE	A
COATING		26-21-00-PRO-MM-0802-001	STAMP(Y/N)	N
HYDROSTATIC TEST(Y/N)		N	TEST PRESSURE	- bar (g)

WELD TABLE					NDE TABLE							PWHT (Y/N)	WPS NO.	REMARK
JOINT NO.	MAT'L	SIZE	THK.	WELD TYPE	RT	UT	MT	PT	VT	HT	PMI			
5A	C/S	8"	6.35T	BW	100%	-	-	-	100%	-	-	N	SH-0101-GF-18	-
5	C/S	8"	6.35T	BW	100%	-	-	-	100%	-	-	N	SH-0101-GF-18	-
6	C/S	8"	6.35T	BW	100%	-	-	-	100%	-	-	N	SH-0101-GF-18	-
3	C/S	OD290.5	6.00T	FIL	-	-	-	-	100%	-	-	N	SH-0101-GF-18	-
4	C/S	OD290.5	6.00T	FIL	-	-	-	-	100%	-	-	N	SH-0101-GF-18	-

WELD TABLE					NDE TABLE							PWHT (Y/N)	WPS NO.	REMARK
JOINT NO.	MAT'L	SIZE	THK.	WELD TYPE	RT	UT	MT	PT	VT	HT	PMI			

EXPLANATION FOR WELD TABLE AND NDE TABLE

RT=RADIOGRAPHIC EXAMINATION, UT=ULTRASONIC EXAMINATION, MT=MAGNETIC PARTICLE EXAMINATION, PT=LIQUID PENETRATION EXAMINATION, VT=VISUAL EXAMINATION, HT=HARDNESS TESTING, PMI=POSITIVE MATERIAL IDENTIFICATION,**.*T: NOMINAL WALL THK., M**.*: MINIMUM WALL THK.

WELD TYPE: BW=BUTT WELD, O-LET= BRANCH WELD(WELDOLET, SOCKOLET, ...), SW=SOCKET WELD, GW=GROOVED(OR W/ FILLET) WELD, FIL=FILLET WELD, SEAL=SEAL WELD, TACK=TACK WELD, THRD=THREADED JOINT, HOLE= HOLE WITHOUT WELDING(RT HOLE, ...), - = NO MAIN WELDING

PARTS	A	MAT'L INSP.(M/K,C/T)	B	FIT-UP	C	WELDING	D	PWHT	E	NDE	F	FINAL INSP.
PD	H		H		H		H				H	
QC	H		H		H		H		H		H	
CUSTOMER												
RECORD NO.												

Project: UTE Azulão 950 MW

Customer: elecnor

Manufacturer: SEONGHWA

Title: PREFABRICATED PIPE SPOOL DRAWING
OILY WASTE SYSTEM

FAB. ISOMETRIC DRAWING NUMBER	00GMA65BR002_UAY00Y-A1	SCALE	NONE
		SHEET	1/1
SPOOL DRAWING NUMBER	00GMA65BR002_UAY00Y-A1_SP-002	SERIAL NUMBER	AZUM002

A4 (210 x 297mm/mm)